PRESSURE GAUGE WITH MICRO SWITCH WEATHER PROOF TYPE PIS5000

Proof Pressure to 40 MPa (400 kg/cm²)
Micro Switch
Measuring Rnage: 0.1 MPa~40 MPa, 1~400 kg/cm² Available

Technical Data

Material: Bourdon tube SS316, Wetted parts SS316
Housing: SS304
Dial: ø100 mm
Protection Class: IP65
Lens: Safety glass
Span Range & Zero Adjustable
Blow-out: Back ø25mm (1")
Accuracy: Gauge indication ±1.6% F.S
Pressure limited: Over range protected 130% of full scale range
Process connection: ½"NPT, option with adaptor available
Electronic connection: DIN43650, Universal plug connector, option with adaptor available
Switch form: One setting point: SPDT x 1 or Two setting point: SPDT x 2 available
Set point: Full scale range available
Switch dead band: ±2% of Full Scale
Switch data:

	AC Load	DC Load
Nominal Operating Voltage	250 VAC max.	28 VDC max.
Current	5A max.	5A max. (ohmic load) 3A max. (inductive load)
Contact Material	Pure silver 999.9	Pure silver 999.9
Ambient Temperature	-20˚C ~ +70˚C	-20˚C ~ +70˚C

Range Selection Table – KG/CM²

Code	Range	Code	Range	Code	Range	Code	Range	Code	Range
001	0~1	004	0~4	007	0~16	010	0~40	013	0~160
002	0~1.6	005	0~6	008	0~20	011	0~60	014	0~250
003	0~2.5	006	0~10	009	0~25	012	0~100	015	0~400

NOTE.
1. Scale Unit: MPa, Kg/cm², Bar available
2. 1bar=0.1Mpa, 1bar=1.01972kg/cm², 1Pa=1x10^{-6} MPa, 1MPa=10.197 kg/cm²

Ordering Information

PIS5000	Code	Process Connection
		(1) ½"BSP (PF) (2) ½"NPT (3) Option (with adaptor)

Code	Conduit Connection
A	½"NPT female
B	DIN 43650 (one setting point)
C	Plug universal connector, M20 x 1.5 cable connection (two setting point)

Code	Material
S	SS316

Code	Micro Switch
1	One setting point SPDT x 1
2	Two setting point SPDT x 2

Code	Measuring Range
	Please refer to selection table and fill in request range.

PIS5000						Complete ordering code

Dimension

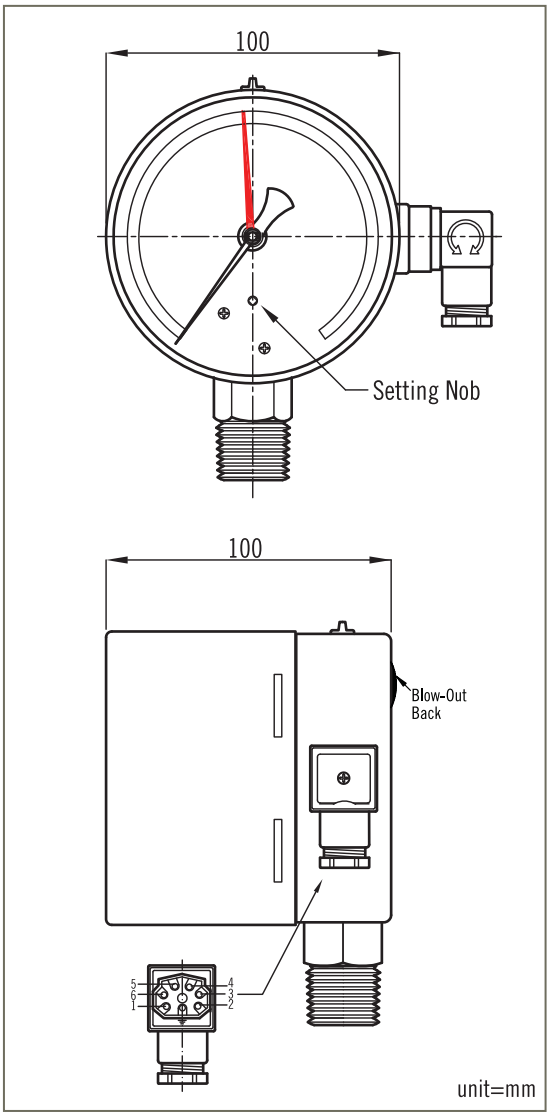

WWW NEW-FLOW COM • TEL: 886-7-8135500 • FAX: 886-7-8225588 • Email: info@new-flow com