FLOMEC

Positive Displacement Flowmeters

Large capacity flowmeters

FLOMEC large capacity flowmeters are suited for receipt verification, loading, un-loading & distribution management at petroleum depots, mine sites, marine & aviation facilities. Common transfer applications involve fuels, oils, solvents, alcohols along with the blending of bio & ethanol fuels either pumped or gravity fed. The meters are compact & light weight in construction, important benefits when used in mobile installations or within confined spaces.

FEATURES/BENEFITS

- High accuracy & repeatability, direct reading flowmeter
- No requirement for flow conditioning (straight pipe runs)
- Compact & light weight construction
- All metal rotors
- Quadrature pulse output option & bi-directional flow

METER SELECTION

- **Aluminum meters** are used for petroleum products including oils and grease, fuels and fuel oils.
- **Ductile iron meters** are for applications where aluminum is not suitable or permitted.
- **Blind pulse meters** are available with a reed switch & open collector outputs. Quadrature pulse outputs are optional.

INTEGRAL INSTRUMENTS

FLOMEC meter options include integral LCD totalisers, flow rate totalisers & batch controllers. These instruments provide monitoring & control outputs including 4~20mA, scaled pulse, alarms & batch. Robust mechanical registers complete range :

- BT 5 digit reset, 8 digit cumulative totaliser.
- RT 6 digit reset, cumulative totaliser & flow rate.
- EB 6 digit 2 stage batcher & cumulative totaliser.
- M* = Mechanical registers *(see model numbering)*

(Instruments also available for remote mounting and with I.S. approvals)

GENERAL SPECIFICATION

Flow rates	:	35 ~ 1500 litres/min. (13~ 400USgal/min) *
Sizes	:	80~100mm (3”~4” NB)
Materials	:	Aluminum or ductile iron

** see also small & medium capacity data sheets for other size meters*

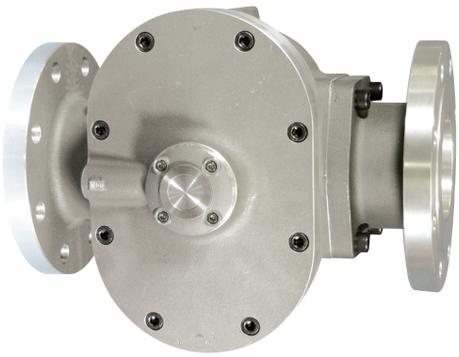

Pulse meter

with LCD register

with 3 or 4 digit mechanical register

Specifications

Model prefix :	OM080	OM80H	OM100
Nominal size (inches)	80mm (3")	80mm (3")	100mm (4")
* Flow range (litres / min)	35 ~ 750	50 ~ 1000	75 ~ 1500
* Flow range (USGM)	10 ~ 200	13 ~ 260	20 ~ 400
Accuracy @ 3cp	± 0.2% of reading (15:1 turndown) ± 0.5% for 20:1		
Repeatability	typically ± 0.03%		
Temperature range	-20°C ~ +120°C (-4°F ~ +250°F)		
Maximum pressure (threaded meters)	bar (PSI)		
aluminium	12 (180)	12 (180)	10 (150)
Ductile iron	12 (180)	12 (180)	10 (150)
Protection class	IP66/67 (NEMA4X), optional Exd IIB T6 or I.S.		
Recommended filtering	350 microns (40 mesh) minimum		
Electrical - for pulse meters	(see also optional outputs)		
Output pulse resolution :	pulses / litre	(pulses / US gallon)	- nominal
Reed switch	2.32 (8.8)	1.55 (5.87)	1.1 (4.15)
Hall effect	9.3 (35.2)	6.2 (23.5)	4.4 (16.6)
Quadrature Hall option	4.65 (17.6)	3.1 (11.8)	2.2 (8.3)
Reed switch output	30Vdc x 200mA max. (max. temp. shock 10°C (50°F) / min)		
Hall effect output (NPN)	3 wire open collector, 5~24Vdc max., 20mA max.		
Optional functions			
Display	flowrate, total (accumulative & resettable)		
Preset batching	1 & 2 stage high speed batch control		
Optional mechanical registers (IP65)			
3 digit reset totaliser	9999 litres or gallons (6 digit accumulative)		
4 digit reset totaliser	99999 litres or gallons (8 digit accumulative)		
Optional outputs			
Flow	4 ~ 20mA, high & low flow rate alarms		
Pulse	scaled pulse (programmable) , pulse amplifier		

* Maximum flow on fuels may be maintained for intermittent periods of refuelling.
* Max. flow is to be reduced as viscosity increases, max. press. drop 100Kpa (15psi)

Model coding

OM080	80mm (3")
OM80H	80mm (3" high flow)
OM100	100mm (4")

Body material

A	Aluminum
D	Ductile iron

Rotor material

4	Aluminum

Bearing type

4	Hardened steel roller bearings

O-ring material

1	Viton (standard) -15~+200°C [-5~+400°F]
2	Ethylene Propylene Rubber -150°C (300°F) max.
3	Teflon encapsulated viton -150°C (300°F) max.
4	Buna-N (Nitrile) -65~+100°C (-53~+212°F)

Temperature limits

- 2	120°C (250°F) - see note 1
- 5	120°C (250°F) - see note 2

Process connections

1	BSP female threaded
2	NPT female threaded
4	ANSI-150 RF flanges
5	ANSI-300 RF flanges
6	PN16 DIN flanges
9	Customer nominated

Cable entries

Code O with mechanical register options	0	3~6mm cable gland (B2/B3 options)
	1	M20 x 1.5mm
	2	1/2" NPT

Model No. Example

OM080 | A | 4 | 4 | 1 | - | 5 | 1 | 1 | R2

Integral options

2 NPN open collector phased outputs	QP	Quadrature pulse output
IECEX & ATEX approved	E1	Explosion proof ~ Exd
IECEX & ATEX approved	Q1	Exd with Quadrature pulse
	B2	BT11 dual totaliser
IECEX & ATEX approved	B3	Intrinsically safe BT11 (I.S.)
flow rate, totals & all outputs	R2	RT12 Flow Rate Totaliser
IECEX & ATEX approved	R3	Intrinsically safe RT12 (I.S.)
dc 2 stage batch controller	E0	EB10 batch controller
M* = M1 litres, M2 gallons	M*	3 digit mechanical reset totaliser
M* = M3 litres, M4 gallons	M*	4 digit mechanical reset totaliser
consult factory	SB	Specific build requirement

(1) 120°C (250°F) rating of the pulse meter, 80°C (180°F) rating with BT, RT & EB options.
See temperature code 5 for higher temperature with BT, RT, & EB
(2) Cooling fin is fitted with integral instruments for operation between 80~120°C (180~250°F)

Recommended strainer (air eliminators available)

ST080S1	80mm (3") - 316SS
ST100S1	100mm (4") - 316SS

DIMENSIONS

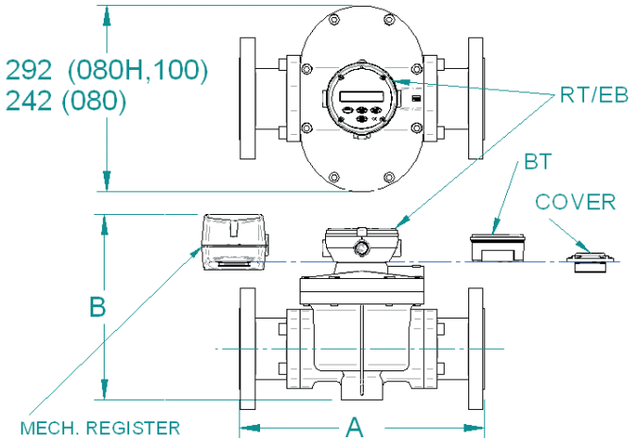

ALL DIMENSIONS IN MILLIMETERS

	A	A	A		B	B	B
Modular Fitting	OM80	OM80H	OM100	**Configuration**	OM80	OM80H	OM100
A.N.S.I. 150	354	382	382	RT/EB REGISTER	251	270	313
DIN 16	354	382	382	BT REGISTER	242	260	304
JIS 10K	354	382	382	COVER	213	230	275
B.S.P.	260	294	294	MECH. REGISTER	276	295	338
N.P.T.	260	294	294				

ACCURACY & PRESSURE DROP

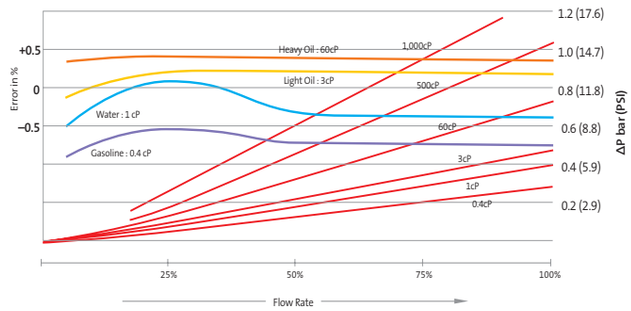

FLOMEC

In the interest of product development, the design & specifications may alter without notification

Data sheet No. DSOMLRG-0307

PED